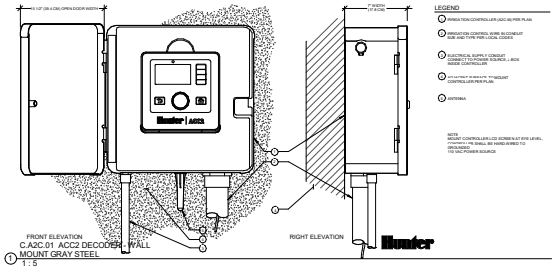

C.A2C.01 ACC2 DECODER - WALL MOUNT GRAY STEEL
1 1 : 5

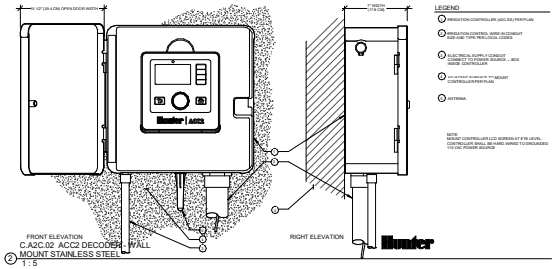

C.A2C.02 ACC2 DECODER - WALL MOUNT STAINLESS STEEL
2 1 : 5

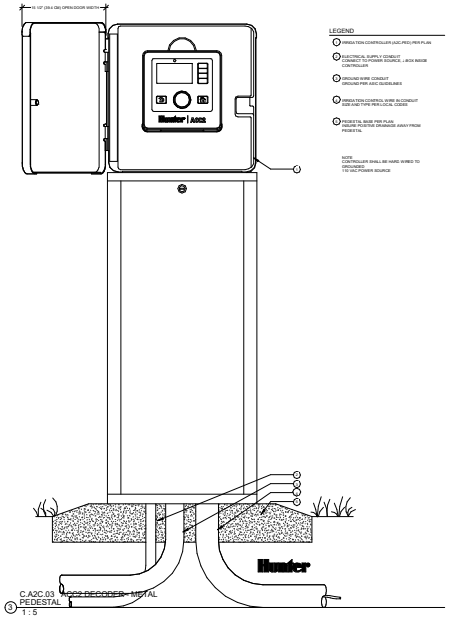

C.A2C.03 ACC2 DECODER - METAL PEDESTAL
3 1 : 5

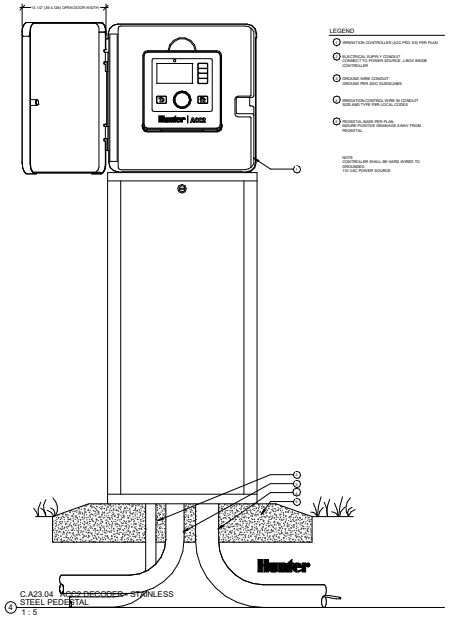

C.A23.04 ACC2 DECODER - STAINLESS STEEL PEDESTAL
4 1 : 5

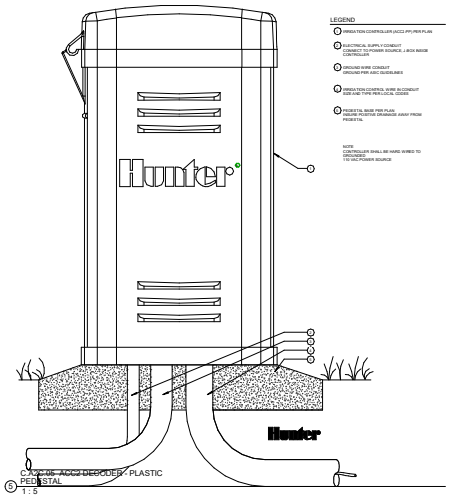

C.A2C.05 ACC2 DECODER - PLASTIC PEDESTAL
5 1 : 5

Hunter®

https://www.hunterindustries.com/

No.	Description	Date

Hunter Industries

CONTROLLERS

ACC2 DECODER
Controller

Project Number	ACC2-DEC
Date	03 Sept 2019
Drawn By	Hunter
Checked By	Hunter

ACC2-DEC

Scale 1 : 5

03-Sep-19 11:29:37 AM